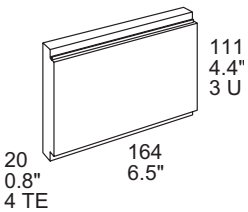

Features

- Extremely wide input voltage range from 12.5 to 154 VDC in the same model
- RoHS-compliant
- Class I equipment
- Compliant with EN 50155, EN 50121-3-2, and IEC/EN 61000-4-2, -3, -4, -5, -6, -8.
- Fire&smoke: Compliant with EN 45545 and NF-F-16
- Input over- and programmable undervoltage lockout including inhibit function
- Low inrush current
- 10 ms interruption time
- 1 to 4 independent, isolated outputs: no load, overload, and short-circuit proof
- Rectangular current limiting characteristic
- Redundant operation (n+1), sense lines, active current sharing option, output voltage adjust
- Hipot test voltage 2.8 kVDC
- Very high efficiency up to 92.5 %
- All PCB boards protected by lacquer
- Extremely slim case (4 TE, 20 mm), fully enclosed
- Very high reliability

Safety-approved to IEC/EN 60950-1 and UL/CSA 60950-1 2nd Ed.

Description

These extremely compact DC-DC converters incorporate all necessary input and output filters, signaling and protection features, which are required in the majority of applications. The converters provide important advantages, such as flexible output power through total current limitation, extremely high efficiency, excellent reliability, very low ripple and RFI noise levels, full input-to-output isolation, negligible inrush current, soft start, over temperature protection, interruption time, and input over- and undervoltage lockout.

The converters are particularly suitable for rugged environments, such as railway applications. They have been designed in accordance with the European railway standards EN 50155 and EN 50121-3-2. All printed circuit boards are coated with a protective lacquer. The converter covers a total input voltage range from 12.5 to 154 VDC in the same model. The input is protected against surges and transients occurring on the source lines. The outputs are continuously open- and short-circuit proof.

Full system flexibility and n+1 redundant operating mode are possible due to series or parallel connection capabilities of the

Table of Contents

	Page
Model Selection	2
Functional Description	5
Electrical Input Data	8
Electrical Output Data	11
Auxiliary Functions	16
Electromagnetic Compatibility (EMC)	18
Immunity to Environmental Conditions	20
Mechanical Data	22
Safety and Installation Instructions	23
Description of Options	25
Accessories	26

Copyright © 2016, Bel Power Solutions Inc. All rights reserved.

北京泰达华芯科技发展有限责任公司 电话：13522494281 邮箱：sales001@power-teda.com
网站：www.powerteda.com

outputs under the specified conditions. When several converters with T option are connected in parallel, a single-wire connection between these converters ensures good current sharing. LEDs at the front panel and an isolated output OK signal indicate the status of the converter. Voltage suppressor diodes and an independent overvoltage monitor protect the outputs against an internally generated overvoltage.

The converters are designed using transformers with planar technology. The input voltage is fed to a booster, which generates approximately 70 V. If V_i is higher, the booster becomes simply a diode. The resulting intermediate voltage supplies the powertrains.

There are two powertrains fitted to a converter, each consisting either of a regulated single output with synchronous rectifier or of a regulated main output with a tracking second output. The output power may be flexibly distributed among the main and the tracking output of each powertrain. Close magnetic coupling in the transformers and output inductors together with circuit symmetry ensure a small deviation between main and tracking output.

A storage capacitor charged to approx. 70 V enables the powertrains to operate during the specified interruption time.

As part of a distributed power supply system, the low-profile design significantly reduces the required volume without sacrificing high reliability. The converters are particularly suitable for 19" rack systems occupying 3 U /4 TE only, but they can also be chassis-mounted by screws or fitted with a heat sink. The connector type is H15. The fully enclosed black-coated aluminum case acts as heat sink and RFI shield, such protecting the converter together with the coating of all components against environmental impacts.

Model Selection

Please ask the Company for availability and lead times!

Note: Only standard models are listed. Other voltage configurations are possible on request.

Table 1: Model types

Output 1, 4			Output 2, 3			Input voltage			η_{24}[1]		η_{110}[2]		Model	Options
$V_{o\,nom}$ [V]	$P_{o\,nom}$[5] [W]	$P_{o\,50}$[6] [W]	$V_{o\,nom}$ [V]	$P_{o\,nom}$[5] [W]	$P_{o\,50}$[6] [W]	$V_{i\,min}$[3] [V]	$V_{i\,cont}$ [V]	$V_{i\,max}$[3] [V]	min [%]	typ [%]	min. [%]	typ [%]		
5.1	122	184	-	-	-	12.5	16.8 – 137.5	154	86.5	89	87	90.5	HP1001-9RTG	U, V, B
12	122	192	-	-	-								HP1301-9RTG	
15	122	192	-	-	-								HP1501-9RTG	
24	122	192	-	-	-	12.5	16.8 – 137.5	154		89		90	HP1601-9RTG	
5.1	61	92	5.1	61	92								HP2001-9RG	U, V, T, B
5.1	61	92	12	61	92								HP2020-9RG	
5.1	61	92	15	61	92								HP2040-9RG	
12	61	96	12	61	92	12.5	16.8 – 137.5	154		91		92.5	HP2320-9RG	
15	61	96	15	61	92	12.5	16.8 – 137.5	154		89.5		91	HP2540-9RG	
24	60	96	24	60	96	12.5	16.8 – 137.5	154	86.5	87.5	87	88	HP2660-9RG	U, V, B
5.1	61	92	12, 12[4]	60	96	12.5	16.8 – 137.5	154		88.5		90	HP3020-9RG	U, V, T B
5.1	61	92	15, 15[4]	60	96	12.5	16.8 – 137.5	154		88		90	HP3040-9RG	
5.1	61	92	24, 24[4]	60	96	12.5	16.8 – 137.5	154	86.5	89	87	90	HP3060-9RG	
12, 12[4]	60	96	12, 12[4]	60	96	12.5	16.8 – 137.5	154					HP4320-9RG	U, V, B
15, 15[4]	60	96	15, 15[4]	60	96	12.5	16.8 – 137.5	154					HP4540-9RG	
15, 15[4]	60	96	24, 24[4]	60	96	12.5	16.8 – 137.5	154					HP4560-9RG	
24, 24[4]	60	96	24, 24[4]	60	96	12.5	16.8 – 137.5	154	86.5	87.5	87	88	HP4660-9RG	

1 Efficiency at T_A = 25 °C, V_i = 24 V, $I_{o\,nom}$, $V_{o\,nom}$
2 Efficiency at T_A = 25 °C, V_i = 110 V, $I_{o\,nom}$, $V_{o\,nom}$
3 Short time; see table 2 for details!
4 Isolated tracking output
5 $P_{o\,nom}$ is specified at T_{amb} = 71 °C
6 $P_{o\,50}$ is specified at T_{amb} = 50 °C and V_i = ≥ 22 V. For V_i = ≤ 22, only 90% of $P_{o\,50}$ are continuously possible.

北京泰达华芯科技发展有限责任公司 电话：13522494281 邮箱：sales001@power-teda.com
网站：www.powerteda.com

Part Number Description

H P 4 6 60 -9 R B1 G

Continuous operating input voltage V_i:
- 16.8 to 137.5 VDC ..... H

Series ..... P

Number of outputs:
- Single output (160 mm case) [4] 1
- Double output (160 mm case) [4] 2
- Triple output (160 mm case) [4] 3
- Quadruple output (160 mm case) [4] 4

Nominal voltage output 1/output 4, $V_{o1/4\ nom}$:
- 5.1 V 0
- 12 V 3
- 15 V 5
- 24 V 6
- other voltages[1] 7, 8

Other specifications and additional features[1] ..... 01, ...99

Nominal voltage output 2/output 3, $V_{o2/3\ nom}$:
- 5.1 V 01
- 12 V 20
- 15 V 40
- 24 V 60
- other voltages and features[1] ..... 80, ... 99

Operational ambient temperature range T_A:
- –40 to 71 °C ..... -9
- other[1] 0

Output voltage adjust (auxiliary function) ..... R[3]

Options:
- Current sharing ..... T[2]
- UVL (preadjusted $V_{i\ min}$) ..... Uxx[5]
- V (rotary switch to adjust $V_{i\ min}$) ..... V[6]
- Heatsink 10, 20, 30 mm B0, B1, B3

RoHS-compliant for all 6 substances ..... G

[1] Customer-specific models.
[2] Only available for single-output powertrains. Option T excludes option R, except for single-output models; refer to table 12. T is standard for single-output models
[3] The R-input influences the first power train only; refer to table 12.
[4] Models with 220 mm case length. Just add 5000 to the standard model number, e.g. HP3020-9RG → HP8020-9RG.
[5] For full compatibility with former P Series, the start voltage can be preadjusted depending on the nominal battery voltage. Excludes opt. V.
[6] Excludes opt. U.

Note: The sequence of options must follow the order above.

Example: HP4660-9RB1G: DC-DC converter, input voltage 16.8 to 137.5 V, 4 outputs providing 24 V each, heatsink B1, ambient temperature of –40 to 71 °C, RoHS-compliant.

Note: All models exhibit the following auxiliary functions, which are not reflected in the type designation: input and output filters, primary referenced PUL (programmable undervoltage shutdown with inhibit function), sense lines (single-, double-, triple-output models only), and LED indicators.

Product Marking

Basic type designation, approval marks, CE mark, warnings, pin allocation, patents, MELCHER logo, specific type designation, input voltage range, nominal output voltages and output currents, degree of protection, identification of LEDs, batch no., serial no. and data code including production site, version, and production date.

北京泰达华芯科技发展有限责任公司 电话：13522494281 邮箱：sales001@power-teda.com
网站：www.powerteda.com

Output Configuration

The HP Series allows high flexibility in output configuration to cover almost every individual requirement, by simply wiring outputs in parallel, in series, or in independent configuration, as shown in the following diagrams.

Parallel or serial operation of several converters with equal output voltage is possible, using the current share option T to provide reasonable current sharing. Choose suitable single-output models, if available.

Note: Unused tracking outputs should be connected in parallel to the respective regulated outputs.

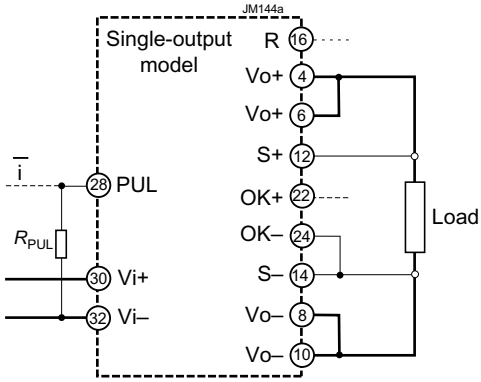

Fig. 1a
Standard configuration (single-output model)

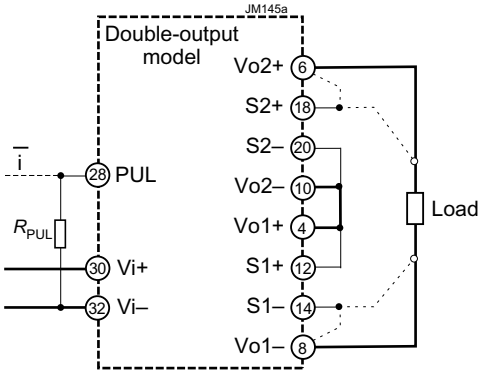

Fig. 1b
Series output configuration of a double-output model. The second output is fully regulated.

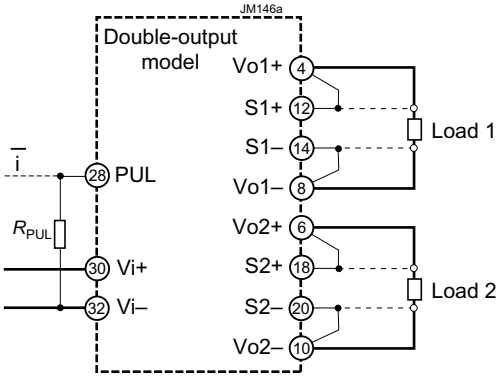

Fig. 1c
Independent double-output configuration. Both outputs are fully regulated

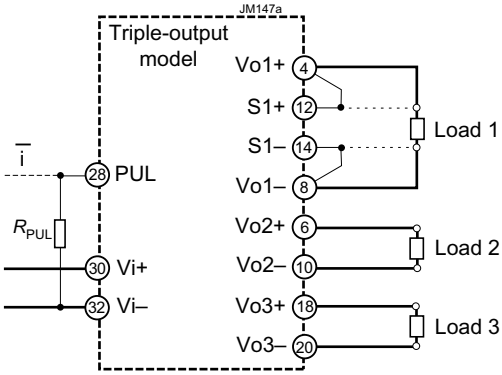

Fig. 1d
Independent triple-output configuration. Output 3 is tracking

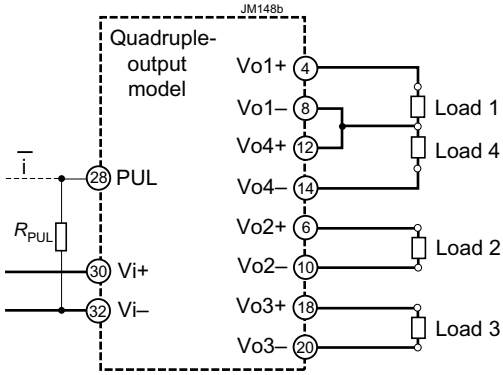

Fig. 1e
Common ground configuration of output 1 with 4 and independent configuration of output 2 and 3

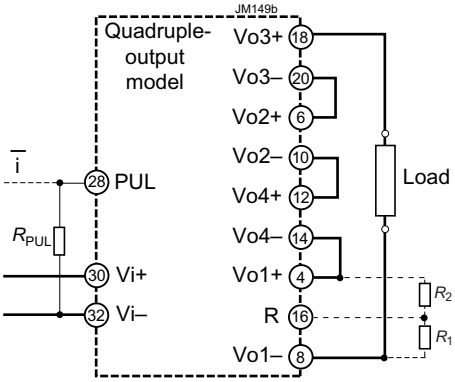

Fig. 1f
Series configuration of all outputs (V_o = 96 V for HP4660). The R-input influences only outputs 1 and 4. For the values of R1 and R2 see Output Voltage Adjust.

MELCHER The Power Partners.
北京泰达华芯科技发展有限责任公司 电话：13522494281 邮箱：sales001@power-teda.com
网站：www.powerteda.com

Functional Description

The converters are designed using transformers with planar technology. The input voltage is fed to a booster, which generates a voltage of approx. 70 V. If V_i is higher, the booster becomes simply a diode. The storage capacitor C_{hu} is charged by a current source to max. 70 V and enables the powertrains to operate during the specified interruption time. The resulting intermediate voltage, between 45 V (during interruption time) and 154 V, supplies the powertrains.

There are two powertrains fitted to a converter, each consisting either of a regulated single output with synchronous rectifier or of a regulated main output with a tracking 2nd output.

As part of a distributed power supply system, the low-profile design significantly reduces the required volume without sacrificing high reliability. The converters are particularly suitable for 19" rack systems occupying 3 U /4 TE only, but they can also be chassis-mounted by screws or fitted with a heat sink. Connector type is H15. The fully enclosed Aluminum case acts as heat sink and RFI shield, such protecting the converter together with the coating of all components against environmental impacts. The converters are equipped with two independent forward converters, switching 180° phase-shifted to minimize the input ripple current. These two forward converters are called "powertrains" (PT), exhibiting either a single output with synchronous rectifier or two isolated outputs, one fully regulated and the other one tracking (semi-regulated), thus providing up to four output voltages. The output power may be flexibly distributed among the main and the tracking output of a double-output powertrain. Close magnetic coupling in the transformers and output inductors together with circuit symmetry ensure small deviation between main and tracking output.

The low input capacitance results in low and short inrush current. After the isolating transformer and rectification, the output filter reduces ripple and noise to a minimum without affecting the dynamic response. Outputs 3 and 4, if available, are tracking (semi-regulated). An individual current limiter built in to of each powertrain limits the total output current of that powertrain in an overload condition. This allows flexible power distribution of the outputs of each powertrain. All outputs can either be connected in series or in parallel; see *Electrical Output Data*.

An auxiliary converter provides the bias voltages for the primary and secondary referenced control logic and auxiliary circuits. The converter is only enabled, if the input voltage is within the operating voltage range and above the programmable undervoltage lockout threshold (PUL) – such limiting the input current dependent on the nominal battery voltage.

All output are equipped with a suppressor diode and an independent monitor sensing the output voltage of the main output. In the case of an overvoltage, it influences the control logic respectively.

The temperature is monitored and induces the converter to disable the outputs. After the temperature has dropped, the converter automatically resumes.

北京泰达华芯科技发展有限责任公司　电话：13522494281　邮箱：sales001@power-teda.com
网站：www.powerteda.com

Bloc Diagrams

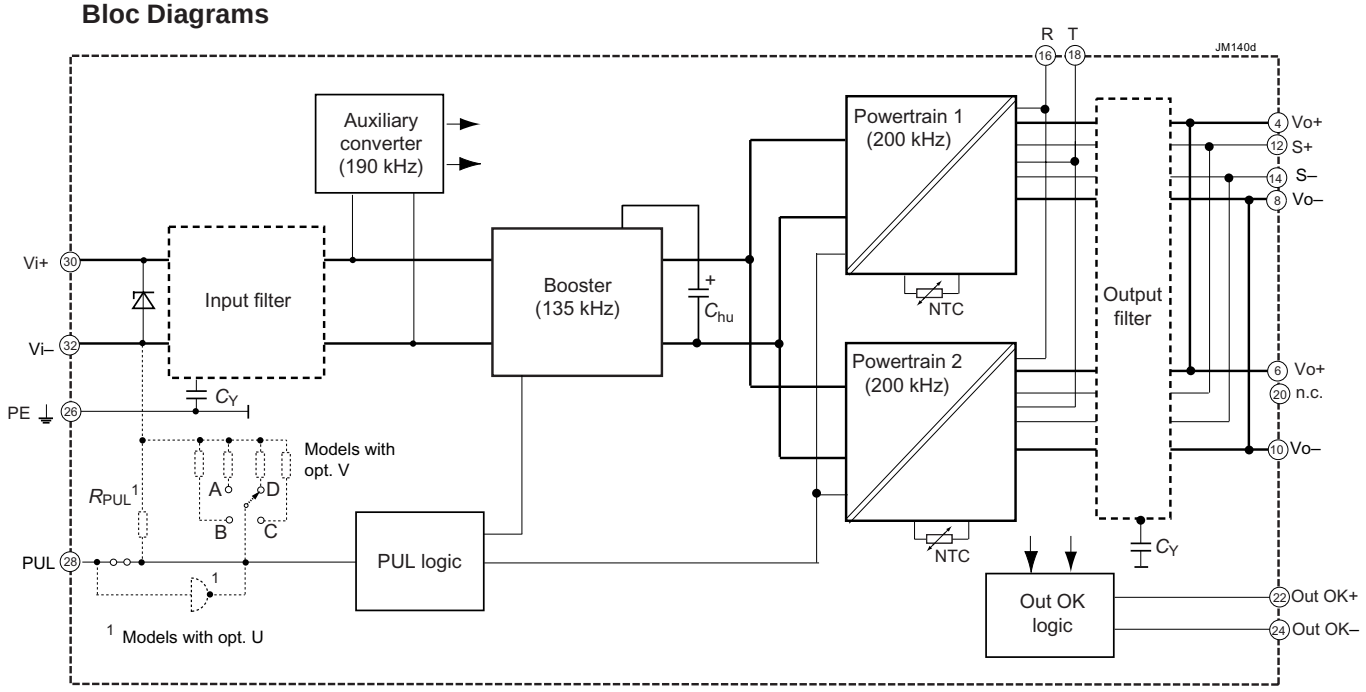

Fig. 2a
Block diagram of single-ouput models

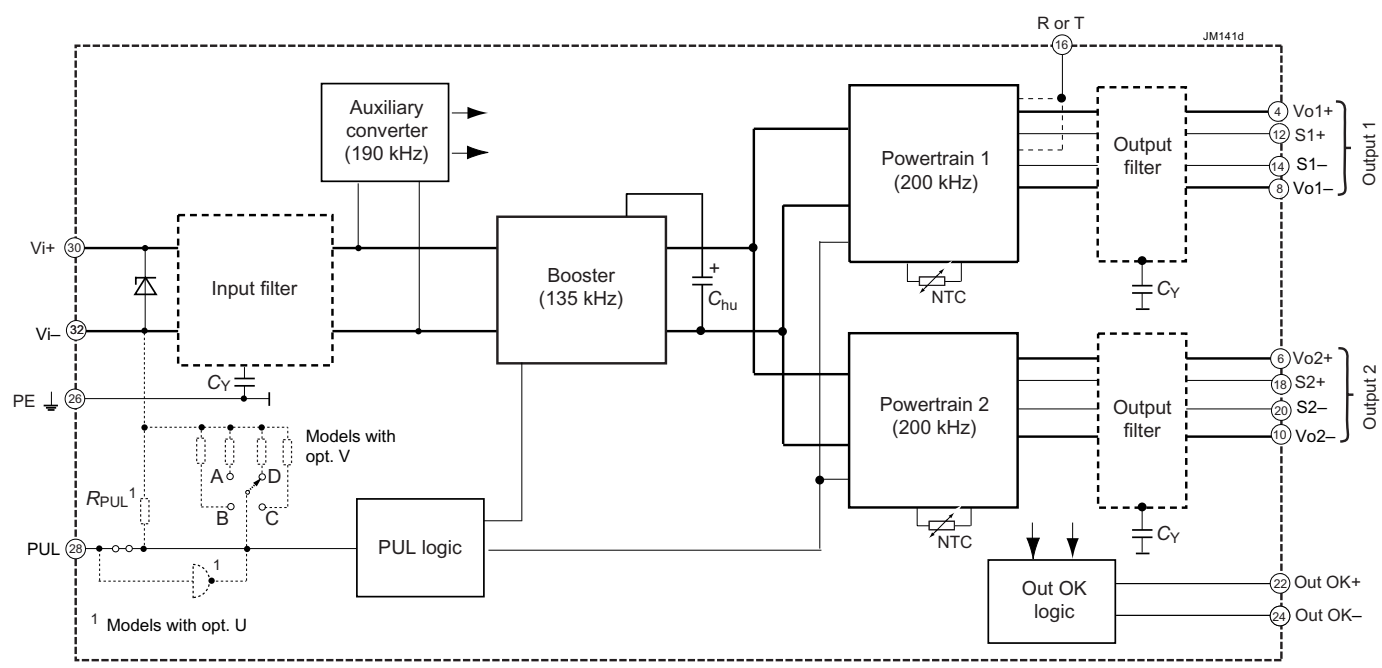

Fig. 2b
Block diagram of double-output models

北京泰达华芯科技发展有限责任公司　电话：13522494281　邮箱：sales001@power-teda.com
网站：www.powerteda.com

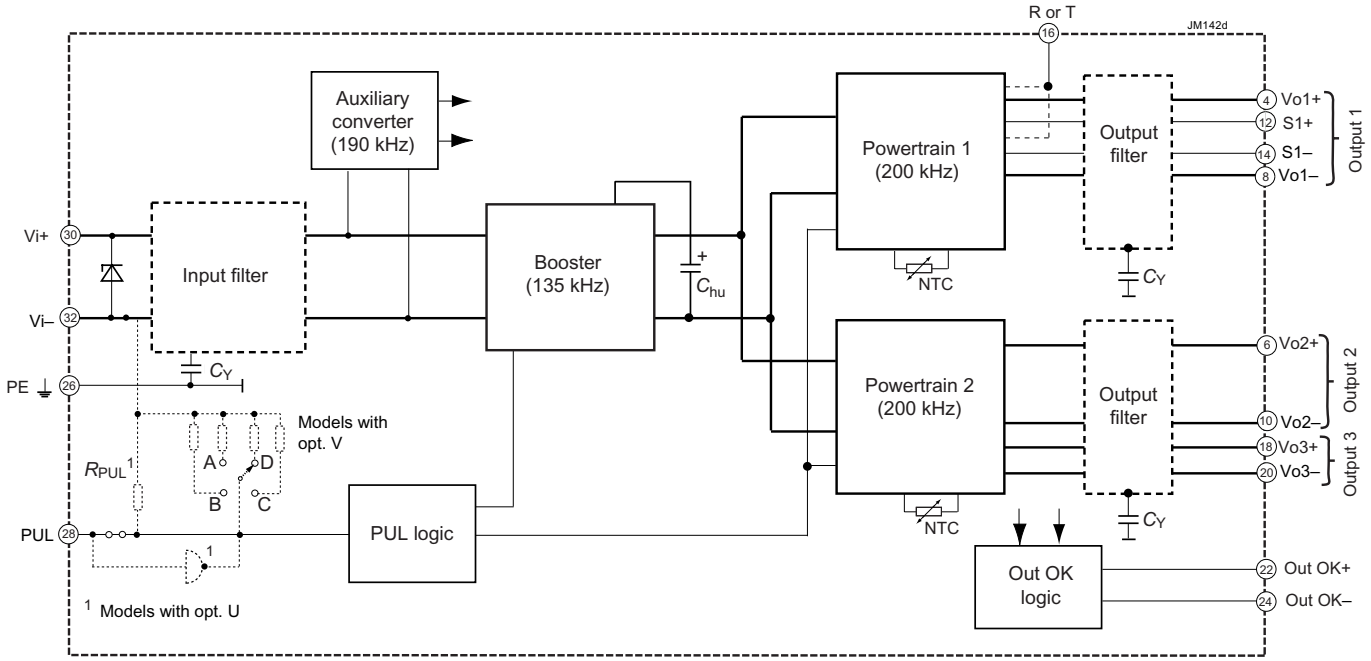

Fig. 2c
Block diagram of triple-output models

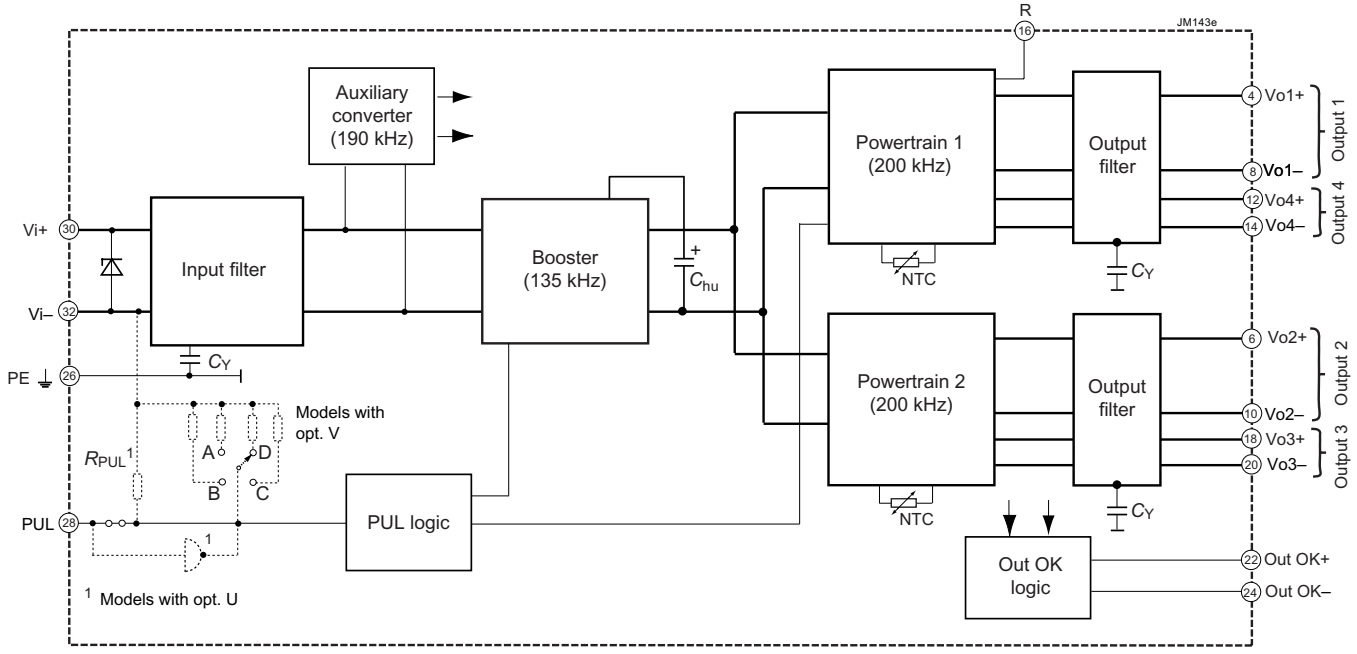

Fig. 2d
Block diagram of quadruple-output models

北京泰达华芯科技发展有限责任公司　电话：13522494281 邮箱：sales001@power-teda.com
网站：www.powerteda.com

Electrical Input Data

General Conditions:
– T_A = 25 °C, unless T_C is specified
– Sense lines connected directly at the connector
– R input and PUL-input not connected

Table 2: Input data

Input			HP			Unit
Characteristics		**Conditions**	**min**	**typ**	**max**	
V_i	Operating input voltage	I_o = 0 – $I_{o\,max}$ $T_{C\,min}$ – $T_{C\,max}$	16.8		137.5	V
	for ≤ 2 s without lockout		12.5		154	
$V_{i\,nom}$	Nominal input voltage range		24	(110)	110	
$V_{i\,abs}$	Input voltage limits	3 s without damage	0		165	
I_i	Typical input current [1]	$V_{i\,nom}$, $I_{o\,nom}$		see fig. 3		
$P_{i\,0}$	No-load input power [1]	$V_{i\,min}$ – $V_{i\,max}$, I_o = 0			6	W
$P_{i\,inh}$	Idle input power [1] [2]	$V_{i\,min}$ – $V_{i\,max}$, V_{PUL} = 0 V			1.5	
C_i	Input capacitance [3]			18		µF
R_i	Input resistance			10		mΩ
$I_{inr\,p}$	Peak inrush current	V_i = 137.5 V, $I_{o\,nom}$		65		A
$t_{inr\,d}$	Duration of inrush current			7		ms
t_{on}	Start-up time at power on [4]	0 → $V_{i\,min}$, $I_{o\,nom}$		250	500	
	Start-up time after inhibit [4]	$V_{i\,min}$ ≥ 16.8 V, $I_{o\,nom}$ V_{PUL} = 0 → 5 V		250	500	

[1] Typical values; dependent on model
[2] Converter inhibited with the PUL-pin.
[3] Not smoothed by the inrush current limiter at start-up (for inrush current calculation)
[4] See fig. 14.

北京泰达华芯科技发展有限责任公司 电话：13522494281 邮箱：sales001@power-teda.com
网站：www.powerteda.com

Input Protection, PUL Function, Fuse

No fuse is incorporated in the converter. Consequently, an external circuit breaker or fuse at system level should be installed to protect against severe defects; see table 3.

Reverse polarity protection is provided by antiparallel diodes across the input, causing the external circuit breaker or fuse to trip. A suppressor diode protects against voltage spikes beyond $V_{i\,abs}$.

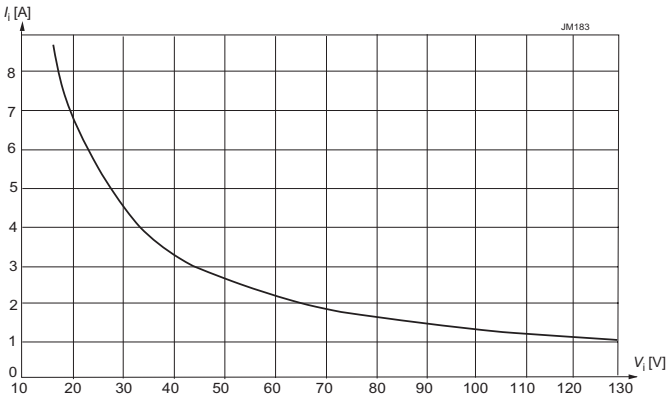

Fig. 3
Typ. input current versus input voltage at nominal load (HP4660)

The converter is designed for an extremly wide input voltage range, allowing for connection to all common railway batteries. However, the programmable input undervoltage lockout (PUL, pin 28) should be adjusted carefully in order to limit the input current at start-up; see fig 3.

Table 3 shows the values of the resistor R_{PUL}, connected between PUL and Vi–, versus the resultant minimum input voltage and the resultant maximum input current. Fig. 4 shows more values of R_{PUL} versus start-up voltage. For stationary batteries, a higher start-up voltage might be advantageous.

Note: If PUL (pin 28) is connected to Vi– (pin 32), the converter is disabled. See also *Inhibit Function* (page 16).

Table 3: PUL specification (typ.) and recommended external fuse depending on the nom. battery voltage.

Battery	R_{PUL}	$V_{i\,min}$ (on / off)		Fuse recommended
24 V	∞	14.9 V	12.5 V [4]	25 A fast, Littlefuse 314 [1]
36 V	75 kΩ	21.3 V	17 V	16 A fast, Schurter SP [2]
48 V	47 kΩ	25.4 V	20.2 V	12.5 A fast, Schurter SP [2]
72 V	16.9 kΩ	43 V	34 V	8 A fast, Schurter SP [2]
96 V	10 kΩ	59.5 V	48 V	8 A fast, Schurter SP [2]
110 V	7.5 kΩ	71 V	56 V	6.3 A slow, BEL fuse MRT [3]
all	< 100 Ω	Converter disabled		

[1] Size 6.3×32 mm [2] size 5×20 mm [3] ∅8.35×7.7 mm [4] for ≤ 2 s

Note: An internal R_{PUL} is fitted for models with option U in order to provide compatibility with the converters Series BP – EP.

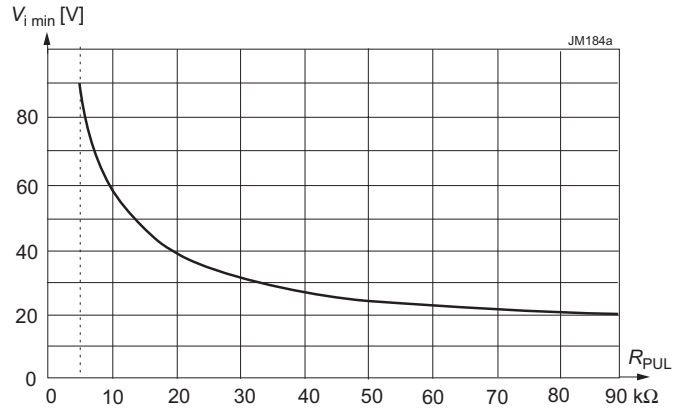

Fig. 4
R_{PUL} versus switch-on voltage

Inrush Current

The converters exhibit small input capacitance C_i. However, a short peak current appears when applying the input voltage.

Note: The storage capacitor C_{hu} is charged by a current source and does not contribute to the inrush current.

The peak inrush current can be found by following calculation; see also fig. 5:

$$I_{inr\,p} = \frac{V_{i\,source}}{(R_{ext} + R_i)}$$

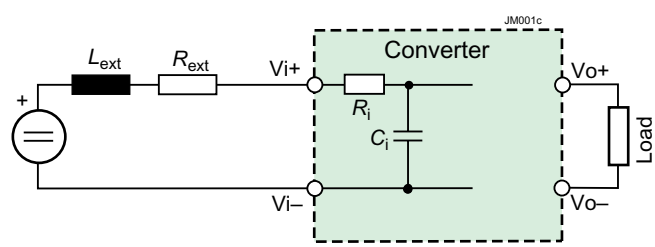

Fig 5
Input circuit to calulate the inrush current

Input Stability with Long Supply Lines

If a converter is connected to the power source by long supply lines exhibiting a considerable inductance L_{ext}, an additional

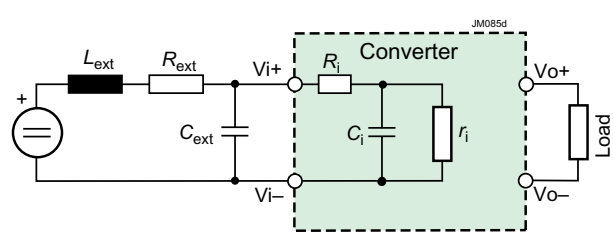

Fig 6
Input configuration to consider stability

北京泰达华芯科技发展有限责任公司 电话：13522494281 邮箱：sales001@power-teda.com
网站：www.powerteda.com

external capacitor C_{ext} connected across the input pins improves the stability and prevents oscillations.

Actually, a HP Series converter with its load acts as negative resistor r_i, because the input current I_i rises, when the input voltage V_i decreases. It tends to oscillate with a resonant frequency determined by the line inductance L_{ext} and the input capacitance $C_{ext} + C_i$ damped by the resistor R_{ext}. The whole system is not linear at all and eludes a simple calculation. One basic condition is given by the formula:

$$C_i + C_{ext} > \frac{L_{ext} \bullet P_{o\,max}}{R_{ext} \bullet V_{i\,min}^2} \qquad \left(r_i = \frac{dV_i}{dI_i} \right)$$

R_{ext} is the series resistor of the voltage source including supply lines. If said condition is not fulfilled, the converter may not reach stable operating conditions. Worst case conditions are a lowest V_i and a highest output power P_o.

Low inductance L_{ext} of the supply lines and an additional capacitor C_{ext} are helpful. Recommended values for C_{ext} are given in table 4, which should allow for stable operation up to an input inductance of 2 mH. C_i is specified in table 2.

Table 4: Recommended values for C_{ext}

$V_{B\,nom}$	Capacitance	Voltage
24 V	1500 µF	40 V
36 V	1000 µF	63 V
48 V	470 µF	100 V
72 V	220 µF	125 V
110 V	100 µF	200 V

Efficiency

The efficiency depends on the model (output configuration) and on the input voltage. Some examples:

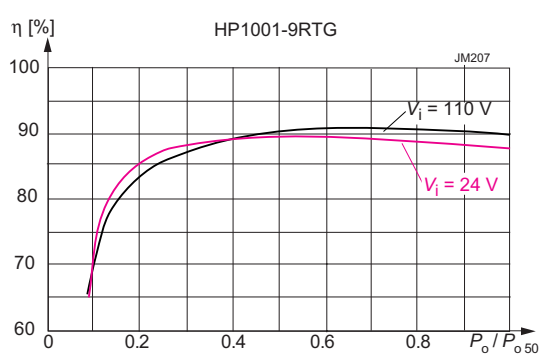

Fig. 7a
Efficiency versus V_i at P_o (HP1001)

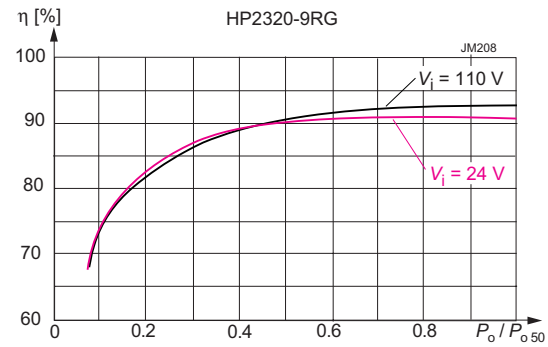

Fig. 7b
Efficiency versus V_i at P_o (HP2320)

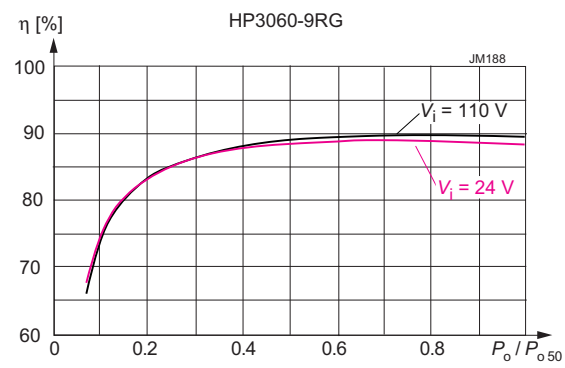

Fig. 7c
Efficiency versus V_i at P_o (HP3060)

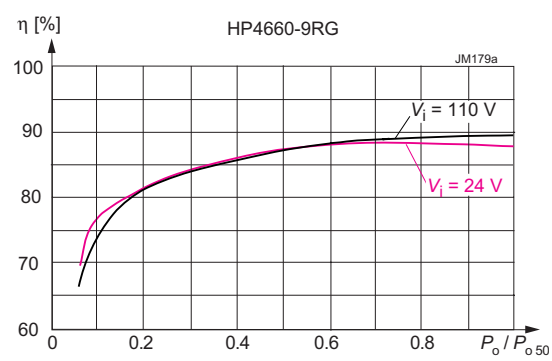

Fig. 7d
Efficiency versus V_i and P_o (HP2660 and HP4660)

北京泰达华芯科技发展有限责任公司 电话：13522494281 邮箱：sales001@power-teda.com
网站：www.powerteda.com

Electrical Output Data

General Conditions:
– T_A = 25 °C, unless T_C is specified.
– Sense lines connected directly at the connector
– R-input and PUL-input not connected

Table 5a: Output data for single-output powertrains

Output			Single-output powertrain	5.1 V			12 V			15 V			24 V			Unit
Characteristics			Conditions	min	typ	max	min	typ	max	min	typ	max	min	typ	max	
V_o	Output voltage [1]		$V_{i\,nom}$, $I_{o\,nom}$	5.07	5.1	5.13	11.94	12	12.06	14.93	15	15.08	23.88	24	24.12	V
$V_{o\,w}$	Worst case output voltage		$V_{i\,min} – V_{i\,max}$ $T_{C\,min} – T_{C\,max}$ (0.02 – 1) $I_{o\,nom}$	5.02		5.18	11.82		12.18	14.78		15.23	23.64		24.36	
$V_{o\,P}$	Overvoltage protection [2]			6.45	6.8	7.14	14.3	15	15.8	17.1	18	18.9	28.5	30	31.5	
$V_{o\,L}$	Overvoltage shutdown [6]				6.5			14.3			17			28		
I_o	Nom / max output current [3]		$V_{i\,min} – V_{i\,max}$ $T_{C\,min} – T_{C\,max}$		12 / 18 [3]			5.1 / 8.0 [3]			4.0 / 6.4 [3]			2.55 / 4.0		A
$I_{o\,L}$	Output current limit			18.9		22.5	8.4		10	6.8		8.0	4.5		5.5	
$V_{o\,noise}$	Output noise [4]	Switch. frequ.	$V_{i\,nom}$, $I_{o\,nom}$ BW = 20 MHz		10			15			20			30		mV_{pp}
		Total incl.spikes			20			30			40			60		
$V_{o\,d}$	Dynamic load regulation	Voltage deviation	$V_{i\,min} – V_{i\,max}$ (0.5 ↔ 1) $I_{o\,max}$			0.6			0.9			1.0			1.5	V
t_d [5]		Recovery time			5			5			5			5		ms
$V_{o\,tr}$	Output voltage trim range (via R-input)		1.1 $V_{i\,min} – V_{i\,max}$ (0.1 – 1) $I_{o\,nom}$	2.75		5.61	6.5		13.2	8.1		16.5	13		26.4	V
α_{Vo}	Temp. coefficient of V_o		$I_{o\,nom}$, $T_{C\,min} – T_{C\,max}$			±0.02			±0.02			±0.02			±0.02	%/K

[1] If the output voltages are increased above $V_{o\,nom}$ through R-input control or remote sensing, the output power should be reduced accordingly, so that $P_{o\,max}$ and $T_{C\,max}$ are not exceeded.
[2] Breakdown voltage of the incorporated suppressor diode at 10 mA (5.1 V) or 1 mA (≥12 V). Exceeding this value might damage the suppressor diode.
[3] First value is for $P_{o\,nom}$ (T_A = 71 °C), second value for $P_{o\,50}$ (T_A = 50 °C); see also *Output Power at Reduced Temperature*
[4] Measured according to IEC/EN 61204 with a probe described in annex A
[5] Recovery time until V_o returns to ±1% of V_o; see *Dynamic Load Regulation*
[6] Output voltage limitation by an additional electronic shutdown

北京泰达华芯科技发展有限责任公司 电话：13522494281 邮箱：sales001@power-teda.com
网站：www.powerteda.com

Table 5b: Output data for double-output powertrains. General conditions as in table 5a.

Output	Double-output powertrain			12 V						Unit
				Main output			Tracking output			
Characteristics			**Conditions**	**min**	**typ**	**max**	**min**	**typ**	**max**	
V_o	Output voltage [1]		$V_{i\,nom}$, $I_{o\,nom}$	11.94	12	12.06	11.76	12	12.24	V
$V_{o\,w}$	Worst case output voltage		$V_{i\,min} – V_{i\,max}$ $T_{C\,min} – T_{C\,max}$ (0.02 – 1) $I_{o\,nom}$	11.82		12.18	See *Output Voltage Regulation*			
$V_{o\,P}$	Overvoltage protection [2]			14.3	15	15.8	14.3	15	15.8	
$V_{o\,L}$	Overvoltage shutdown [6]				14.3		none			
I_o	Nom/max output current [3]		$V_{i\,min} – V_{i\,max}$ $T_{C\,min} – T_{C\,max}$		2.5 / 4.0			2.5 / 4.0		A
$I_{o\,L}$	Output current limit			8.4					10	
$V_{o\,noise}$	Output noise [4]	Switch. frequ.	$V_{i\,nom}$, $I_{o\,nom}$ BW = 20 MHz		15			15		mV_{pp}
		Total incl. spikes			30			30		
$V_{o\,d}$	Dynamic load regulation	Voltage deviation	$V_{i\,min} – V_{i\,max}$ (0.5 ↔ 1) $I_{o\,max}$			0.5			0.8	V
t_d [5]		Recovery time			1			1		ms
$V_{o\,tr}$	Output voltage trim range (via R-input)		1.1 $V_{i\,min} – V_{i\,max}$ (0.1 – 1) $I_{o\,nom}$	4.5		13.2	See *Output Voltage Regulation*			V
α_{Vo}	Temp. coefficient of V_o		$I_{o\,nom}$ $T_{C\,min} – T_{C\,max}$			±0.02				%/K

Table 5c: Output data for double-output powertrains. General conditions as in table 5a.

Output	Double-output powertrain			15 V						24 V						Unit
				Main output			Tracking output			Main output			Tracking output			
Characteristics			**Conditions**	**min**	**typ**	**max**	**min**	**typ**	**max**	**min**	**typ**	**max**	**min**	**typ**	**max**	
V_o	Output voltage [1]		$V_{i\,nom}$, $I_{o\,nom}$	14.93	15	15.08	14.7	15	15.3	23.88	24	24.12	23.76	24	24.24	V
$V_{o\,w}$	Worst case output voltage		$V_{i\,min} – V_{i\,max}$ $T_{C\,min} – T_{C\,max}$ (0.02 – 1) $I_{o\,nom}$	14.78		15.23	See *Output Voltage Regulation*			23.64		24.36	See *Output Voltage Regulation*			
$V_{o\,P}$	Overvoltage protection [2]			17.1	18	18.9	17.1	18	18.9	28.5	30	31.5	28.5	30	31.5	
$V_{o\,L}$	Overvoltage shutdown [6]				17		none				28		none			
I_o	Nom/max output current [3]		$V_{i\,min} – V_{i\,max}$ $T_{C\,min} – T_{C\,max}$		2.0 / 3.2			2.0 / 3.2			1.25 / 2.0			1.25 / 2.0		A
$I_{o\,L}$	Output current limit			6.8					8.0	4.5					5.5	
$V_{o\,noise}$	Output noise [4]	Switch. frequ.	$V_{i\,nom}$, $I_{o\,nom}$ BW = 20 MHz		20			20			25			25		mV_{pp}
		Total incl. spikes			40			40			50			50		
$V_{o\,d}$	Dynamic load regulation	Voltage deviation	$V_{i\,min} – V_{i\,max}$ (0.5 ↔ 1) $I_{o\,max}$			0.5			1.0			0.8			1.7	V
t_d [5]		Recovery time			1			1			1			2		ms
$V_{o\,tr}$	Output voltage trim range (via R-input)		1.1 $V_{i\,min} – V_{i\,nom}$ (0.1 – 1) $I_{o\,nom}$	8.1		16.5	See *Output Voltage Regulation*			13		26.4	See *Output Voltage Regulation*			V
α_{Vo}	Temp. coefficient of V_o		$I_{o\,nom}$ $T_{C\,min} – T_{C\,max}$			±0.02						±0.02				%/K

[1] If the output voltages are increased above $V_{o\,nom}$ through R-input control or remote sensing, the output power should be reduced accordingly, so that $P_{o\,50}$ and $T_{C\,max}$ are not exceeded.
[2] Breakdown voltage of the incorporated suppressor diode at 1 mA. Exceeding this voltage might damage the suppressor diode.
[3] First value is for $P_{o\,nom}$ (T_A = 71 °C), second value for $P_{o\,50}$ (T_A = 50 °C); see also *Output Power at Reduced Temperature*
[4] Measured according to IEC/EN 61204 with a probe described in annex A
[5] Recovery time until V_o returns to ±1% of V_o; see *Dynamic Load Regulation*
[6] Output voltage limitation by an additional electronic shutdown

北京泰达华芯科技发展有限责任公司　电话：13522494281　邮箱：sales001@power-teda.com
网站：www.powerteda.com

Parallel and Series Connection

The first outputs of power trains with equal nominal output voltage can be connected in parallel. Where available, we recommend ordering of option T.

Any output can be connected in series with any other output. If the main and the tracking output of the same power train are connected in series, consider that the effect of the R-input is doubled.

Notes:

- If a tracking output is not used, connect it in parallel to the respective regulated main output.
- Connection of several outputs in parallel should include measures to approximate all output currents. Single-output power trains exhibit current-share pins (T), which must be interconnected. If no current-share pins are available, the load lines should exhibit a similar resistance.
- The PUL-pins (pin 28) should exhibit an individual PUL resistor for each converter. If the shutdown function is used, each PUL-pin must be controlled individually.
- If several outputs are connected in series, the resulting voltage may exceed the SELV level (SELV = Safety Extra Low Voltage) and require additional safety measures in order to comply with international safety standards.

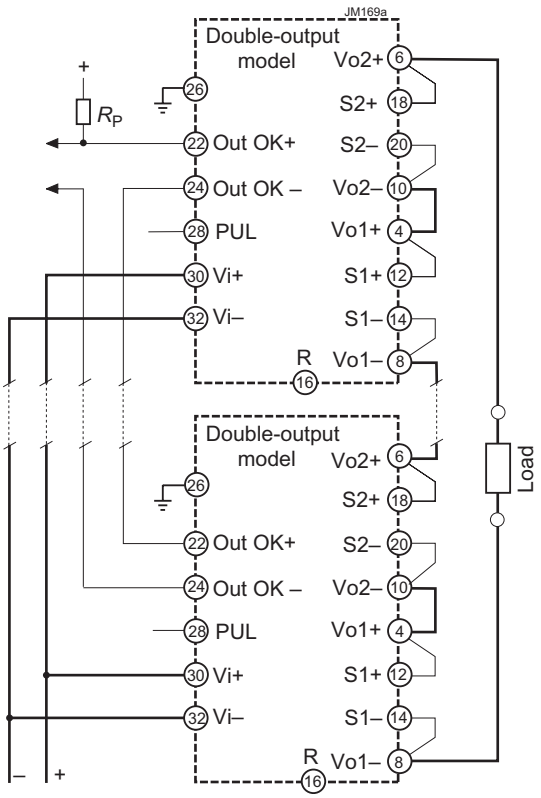

Fig. 8
Series connection of double-output converters. Sense lines connected at the connector.

Parallel operation of two double-output converters with series-connected outputs is shown in fig. 9. The link between the T pins ensures proper current sharing, even though only the first outputs are influenced by T-function. Sense lines are connected directly at the connector, and load lines have equal length and section.

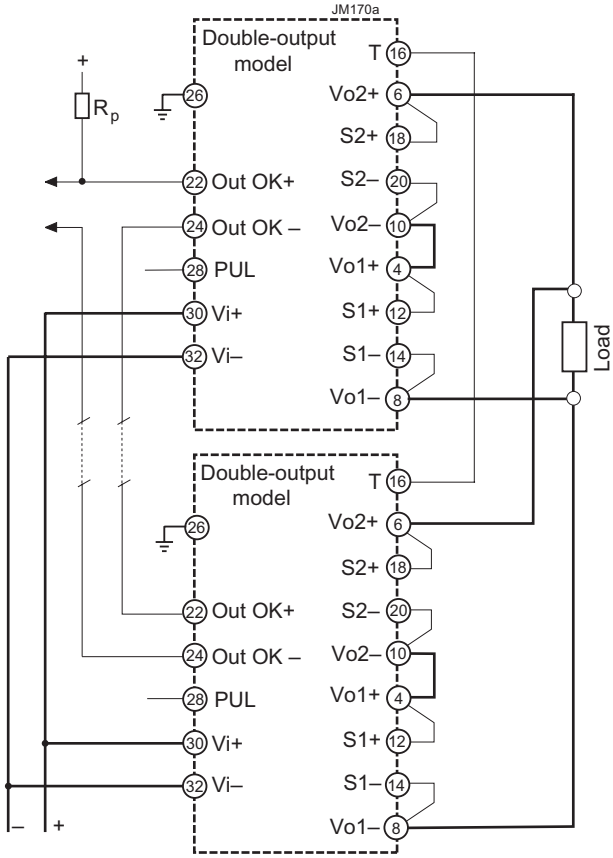

Fig. 9
Parallel operation of 2 double-output converters with series-connected outputs.

Redundant Systems

An example of a redundant system using converters with 2 regulated outputs (HP2020) is shown in fig. 10. Load 1 is powered with 5.1 V and load 2 with 12 V.

The converters are separated with ORing diodes. If one converter fails, the remaining one still delivers the power to the loads. If more power is needed, the system may be extended to more parallel converters (n+1 redundancy).

Current sharing of the 5.1 V outputs is ensured by the interconnected T pins, whereas the sense lines are connected after the ORing diodes to maintain the correct output voltage.

MELCHER The Power Partners.
北京泰达华芯科技发展有限责任公司 电话：13522494281 邮箱：sales001@power-teda.com
网站：www.powerteda.com

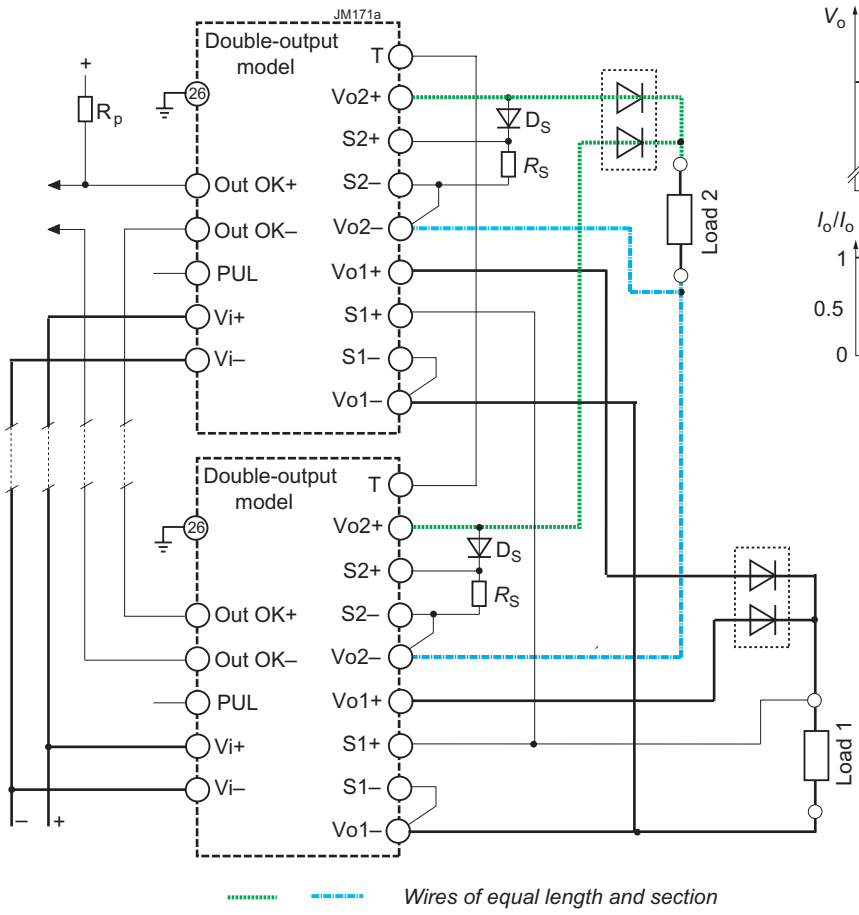

Fig. 10
Redundant configuration (example)

For the 12 V outputs, no active current-share feature is available. As a result, 2 little diodes D_s (loaded by small resistors R_s) simulate the voltage drop of the ORing diodes. Reasonable current sharing is provided by load lines of equal length and section.

Hot Swap

In applications using the hot swap capabilities, dynamic output voltage changes during plug-in and plug-out operations may occur.

Output Voltage Regulation

Line and load regulation of the regulated outputs is so good that input voltage and output current have virtually no influence to the output voltage.

If a tracking output is not loaded, its output voltage may rise considerably. Thus, unused tracking outputs should be connected in parallel to the respective main output.

The dynamic load regulation is shown in fig. 11.

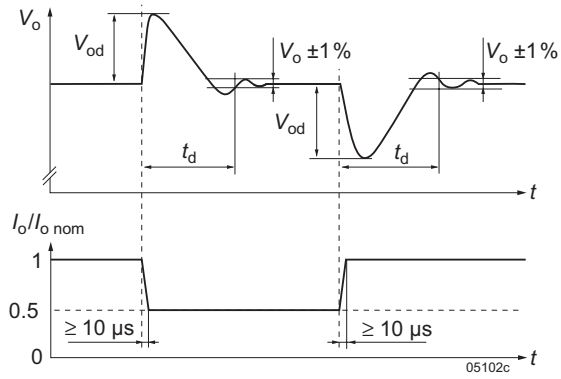

Fig. 11
Typical dynamic load regulation of the output voltage

Tracking Outputs

The main outputs 1 and 2 are regulated to $V_{o\,nom}$ independent of the output current. If the loads on outputs 3 and 4 are too low (<10% of $I_{o\,nom}$), their output voltage tends to rise. V_{o3} and V_{o4} depend on the load distribution: If all outputs are loaded with at least 10% of $I_{o\,nom}$, V_{o3} and V_{o4} remain within ±5% of $V_{o\,nom}$. The chart fig. 12 shows the regulation of the tracking outputs under different load conditions. If $I_{o1} = I_{o4}$ and $I_{o2} = I_{o3}$ or if the tracking outputs are connected in series with their respective regulated outputs, then V_{o3} and V_{o4} remain within ±1% of $V_{o\,nom}$, provided that the load is at least $I_{o\,min}$.

Because the HP Series uses main transformers in planar technology, the tracking outputs follow the main outputs very closely.

Note: If a tracking output (V_{o3} or V_{o4}) is not loaded, it should be connected in parallel to the respective main output (V_{o3} parallel to V_{o2}, V_{o4} parallel to V_{o1}).

北京泰达华芯科技发展有限责任公司 电话：13522494281 邮箱：sales001@power-teda.com
网站：www.powerteda.com

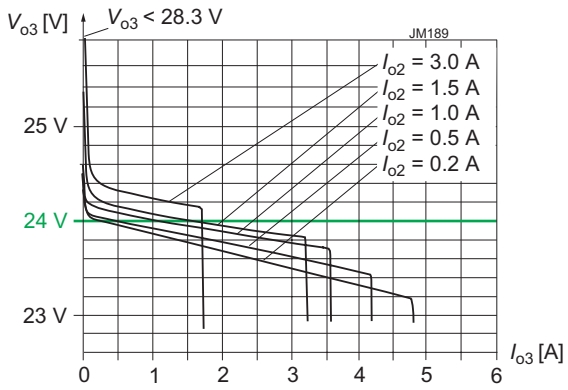

Fig. 12
24 V tracking output $V_{o3} = f(I_{o2})$. The same chart applies for $V_{o4} = f(I_{o1})$

Output Current Protection

All outputs are continuously protected against open-circuit (no load) and short-circuit by an electronic current limitation.

Single- and double-output powertrains have a rectangular current limitation characteristic. In double output power-trains, only the total current is limited allowing free choice of load distribution between the two outputs of each power train up to a total $I_{o1} + I_{o4} = I_{o\,max}$ or $I_{o2} + I_{o3} = I_{o\,max}$.

All outputs are protected by an individual suppressor diode. In addition, the main outputs are monitored. In the case of an overvoltage (caused by a defect), the monitoring circuit resets the PWM logic and the output voltage.

Interruption Time

The interruption time t_{hu} (ride-through time) of the system complies to class 2 (≥10 ms) according to EN 50155:2007, clause 5.1.1.3. It is valid for interruption and a short-circuit of the input voltage V_i ($V_i \geq 24$ V).

After such an event, the system is ready for the next event after 10 s.

Note: t_{hu} is the minimum interruption time, but depending on different operating conditions, this time can be much longer.

Thermal Considerations and Protection

If a converter is mounted upright in free air allowing for unrestricted convection cooling and is operated at nominal input voltage (24 V to 110 V) and nominal output power at $T_{A\,max}$ (see table *Temperature specifications*), the temperature T_C measured at the measurement point on the case (see *Mechanical Data)* approaches $T_{C\,max}$ after an initial warm-up phase. However the relationship between T_A and T_C depends heavily on the operating conditions and system integration. The thermal conditions are influenced significantly by the input voltage, the output current, airflow, and the temperature of the adjacent elements and surfaces. $T_{A\,max}$ is therefore in contrast to $T_{C\,max}$ an indicative value only.

Operating the converters with output currents beyond $I_{o\,nom}$ requires a reduction of the maximum ambient temperature or forced-air cooling in order to keep T_C below 100 °C. When $T_{C\,max}$ is exceeded, the thermal protection (sensors near the output rectifiers of each powertrain) is activated and disables the outputs. The converter automatically resumes when the temperature drops below this limit.

At $T_A \leq 71$ °C, $P_{o\,nom}$ is continuously possible, if $V_i \geq 16.8$ V.

At $T_A \leq 50$ °C, $P_{o\,50}$ is continuously possible, if $V_i \geq 22$ V.

Note: Forced cooling or an additional heat sink (option B, B1, B3) improves the reliability or allow T_A for going beyond $T_{A\,max}$ provided that $T_{C\,max}$ is not exceeded. In rack systems without proper thermal management the converters must not be packed too closely together! In such a case the use of 5 or 6 TE front panels is recommended.

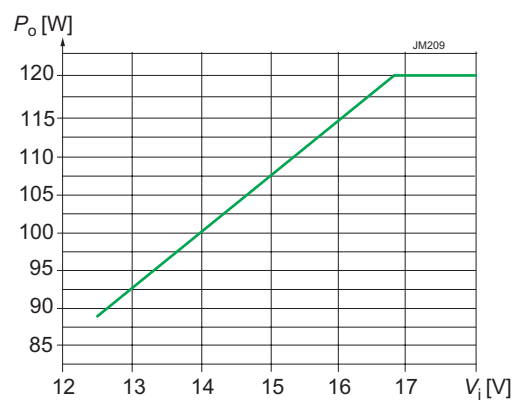

Fig. 13
Possible output power P_o versus V_i at T_A = 71 °C (HP3060 and HP8060)

北京泰达华芯科技发展有限责任公司 电话：13522494281 邮箱：sales001@power-teda.com
网站：www.powerteda.com

Auxiliary Functions

Inhibit Function

The PUL input (pin 28) can also be used as shutdown (for the PUL function see table 3). The response time t_r is specified in table 2; t_{hu} is the interruption time (10 ms).

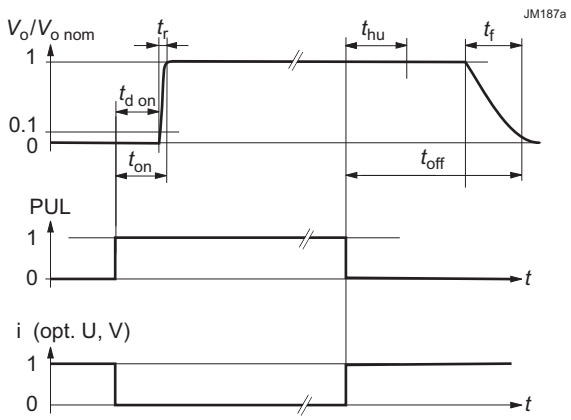

Fig. 14
Typical output response to the PUL-signal (used as inhibit) or to the inhibit signal with option U or V

The current coming out from pin 28 (PUL) is typ. 0.6 mA (<1 mA). If pin 28 is left open-circuit, the voltage is 5 V. The converter is disabled when V_{PUL} is ≤0.7 V.

Note: For converters with opt. U or V, see *Primary Inhibit for Option U and V* (page 25).

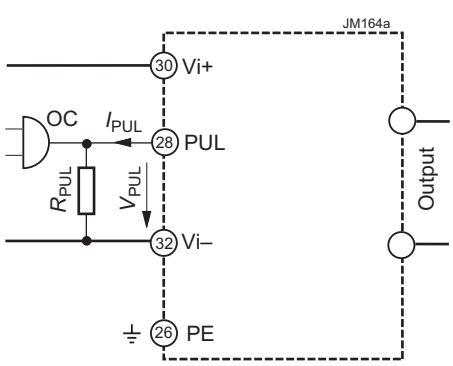

Fig. 15
Circuit for the inhibit function (not with options U, V)

Current Share Function

If the T-pins of parallel-connected single-output powertrains are linked together, the powertrains share their output current evenly. Refer to section *Parallel and Series Connection*.

Output Voltage Adjust of V_{o1} and V_{o4}

Note: With open R-input, $V_o = V_{o\,nom}$.

The converters allow for adjusting the output voltage of powertrain 1. Powertrain 2 can not be adjusted except for single-output converters. The programming is performed by an external resistor R_{ext1} or R_{ext2}, connected to the R-input. The adjust range is limited to the values given in table *Electrical Output Data*.

With double-output powertrains, both outputs V_{o1} and V_{o4} are influenced by the R-input setting simultaneously.

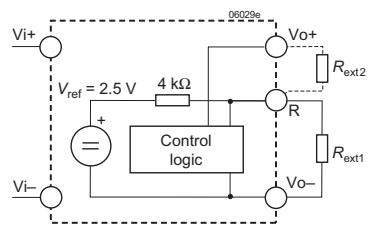

Fig. 16
Output voltage control by means of the R-input

Adjustment of V_o (or V_{o1}) is possible by means of an external resistor R_{ext}. V_{o4} is tracking the voltage V_{o1}. The trim range of V_o (or V_{o1}) is specified in table 5 as $V_{o\,tr}$.

Depending on the value of the required output voltage, the resistor shall be connected:

either: Between the R-pin and S– (or Vo1–) to adjust the output voltage to a value below $V_{o\,nom}$:

$$R_{ext1} \approx 4\ \text{k}\Omega \bullet \frac{V_o}{V_{o\,nom} - V_o}$$

or: Between the R-pin and S+ (or Vo1+) to adjust the output voltage to a value greater than $V_{o\,nom}$:

$$R_{ext2} \approx 4\ \text{k}\Omega \bullet \frac{(V_o - 2.5\ \text{V})}{2.5\ \text{V} \bullet (V_o/V_{o\,nom} - 1)}$$

Note: Adjustment by an external voltage source is not recommended.

北京泰达华芯科技发展有限责任公司　电话：13522494281　邮箱：sales001@power-teda.com
网站：www.powerteda.com

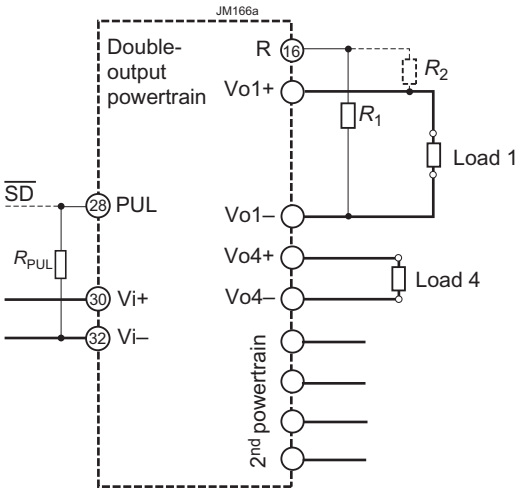

Fig. 17
Output adjust of V_{o1} and V_{o4} using R_{ext1}. The other outputs are not influenced.

Sense Lines

Important: Sense lines should always be connected. Incorrectly connected sense lines may damage the converter. If sense pins are left open-circuit, the output voltages are not accurate.

This feature enables compensation of voltage drop across the connector contacts and the load lines including ORing diodes in true redundant systems.

Applying generously dimensioned cross-section load leads avoids troublesome voltage drop. To minimize noise pick-up, wire sense lines parallel or twisted to the respective output line. To be sure, connect the sense lines directly at the female connector.

The voltage difference between any sense line and its respective power output pin (as measured on the connector) should not exceed the following values at nominal output voltage.

Table 6: Voltage compensation allowed using sense lines

Output type	Total drop	Negative line drop
5.1 V output	<0.5 V	<0.25 V
12, 15 V output	<1.0 V	<0.5 V

LEDs and Out OK Monitor

When the input voltage is in range, the green LED "In OK" is shining provided that the inhibit function is not activated.

The voltage(s) of the main output(s) are monitored. When the main outputs are in range, the LED “Out OK 1” and “Out OK 2” are activated.

In addition a galvanically isolated open-collector signal “Out OK” is generated. This function is not adjustable, but if the R-input is used to adjust V_o, the trigger levels are tracking.

The open collector output is conducting, if the monitored conditions are fulfilled (tolerances typ. ±3%). Otherwise, the input voltage is out of limits or the output current is too high.

Dimensioning of resistor value $R_p \geq \frac{V_p}{50\ \text{mA}}$

Caution: The Out OK circuit is protected by a Zener diode. To prevent damage, the applied current I_{OK} should be limited to ±50 mA. The Zener diode should not be exposed to more than 0.25 W.

Table 7: Output OK data

Characteristics / Conditions		min	typ	max	Unit
V_{OK}	Out OK voltage Output good, I_{OK} < 50 mA		0.8	1.5	V
I_{OK}	Out OK current Output out of range, V_{OK} < 30 V			30	µ↳

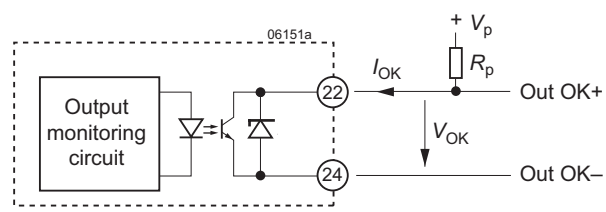

Fig. 18
Output OK circuit

All outputs are protected by an individual suppressor diode. In addition, the main outputs are monitored. In the case of an overvoltage (caused by a defect), the monitoring circuit resets the PWM logic and the output voltage.

北京泰达华芯科技发展有限责任公司 电话：13522494281 邮箱：sales001@power-teda.com
网站：www.powerteda.com

Electromagnetic Compatibility (EMC)

The HP Series was successfully tested to the following specifications:

Electromagnetic Immunity

Table 8: Electromagnetic immunity (type tests)

Phenomenon	Standard	Level	Coupling mode[1]	Value applied	Waveform	Source imped.	Test procedure	In oper.	Perf. crit.[2]
Electrostatic discharge (to case)	IEC/EN 61000-4-2	4[3]	contact discharge	8000 V_p	1/50 ns	330 Ω	10 positive and 10 negative discharges	yes	A
			air discharge	15000 V_p					
Electromagnetic field	IEC/EN 61000-4-3	x[4]	antenna	20 V/m	AM 80% /1 kHz	n.a.	80 – 800 MHz	yes	A
		5	antenna	20 V/m	AM 80% /1 kHz	n.a.	800 – 1000 MHz	yes	A
				10 V/m			1400 – 2000 MHz		
				5 V/m			2000 – 2700 MHz		
				3 V/m			5100 – 6000 MHz		
Electrical fast transients/burst	IEC/EN 61000-4-4	3[6]	capacitive, o/c	±2000 V_p	bursts of 5/50 ns 2.5/5 kHz over 15 ms; burst period: 300 ms	50 Ω	60 s positive 60 s negative transients per coupling mode	yes	A
		4	i/c, +i/–i direct	±4000 V_p					
Surges	IEC/EN 61000-4-5	3[7]	i/c	±2000 V_p	1.2/50 µs	42 Ω / 0.5 µF	5 pos. and 5 neg. surges per coupling mode	yes	A
			+i/–i	±1000 V_p					
Conducted disturbances	IEC/EN 61000-4-6	3[8]	i, o, signal wires	10 VAC (140 dBµV)	AM 80% 1 kHz	150 Ω	0.15 – 80 MHz	yes	A
Power frequency magnetic field	IEC/EN 61000-4-8	3[9]	--	100 A/m			60 s in all 3 axis	yes	A

1 i = input, o = output, c = case
2 A = normal operation, no deviation from specs.; B = normal operation, temporary loss of function or deviation from specs possible
3 Exceeds EN 50121-3-2:2015 table 6.3 and EN 50121-4:2006 table 1.4.
4 Corresponds to EN 50121-3-2:2015 table 6.1 and exceeds EN 50121-4:2006 table 1.1.
5 Corresponds to EN 50121-3-2:2015 table 6.2 and EN 50121-4:2006 table 1.2 (compliance with digital mobile phones).
6 Corresponds to EN 50121-3-2:2015 table 5.2 and EN 50121-4:2006 table 2.2.
7 Covers or exceeds EN 50121-3-2:2015 table 4.3 and EN 50121-4:2006 table 2.3.
8 Corresponds to EN 50121-3-2:2015 table 5.1 and EN 50121-4:2006 table 3.1 (radio frequency common mode).
9 Corresponds to EN 50121-4:2006 table 1.3.

北京泰达华芯科技发展有限责任公司 电话：13522494281 邮箱：sales001@power-teda.com
网站：www.powerteda.com

Electromagnetic Emissions

The conducted emissions (fig. 19) have been tested according to EN 55011 (similar to EN 55022, much better values than requested by EN 50121-3-2:2015, table 1.1). The limits in fig. 19 apply to quasipeak values, which are always lower then peak values.

In addition, the values for average must keep a limit 10 dBµV below the limits in fig. 19 (not shown).

Radiated emissions have been tested according to EN 55011 (similar to EN 55022), class A, as requested in EN 50121-3-2:2015, table 3.1. The test is executed with horizontal and vertical polarization. The worse result is shown in fig. 20.

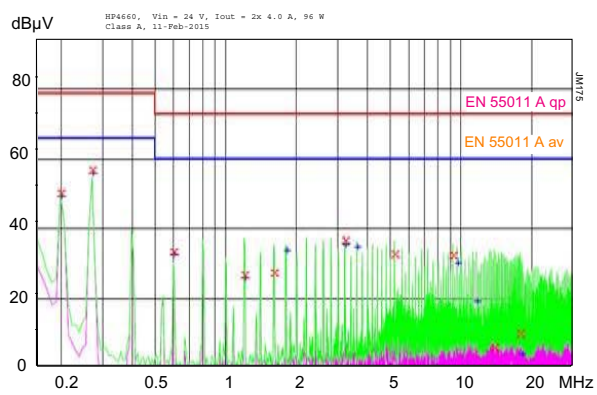

Fig. 19a
HP4660: Typ. disturbance voltage at the input (V_i = 24 V, $I_{i\ nom}$, resitive load, quasi peak and average).

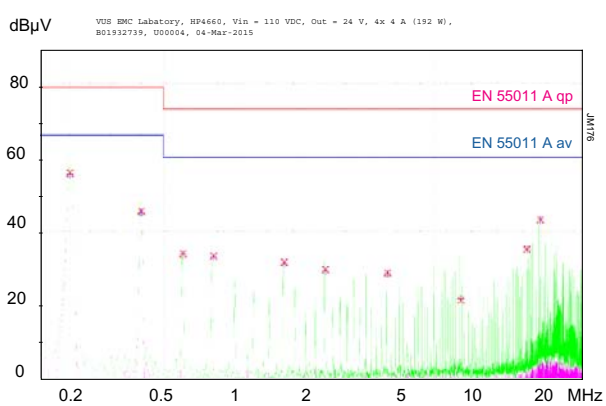

Fig.19b
HP4660: Typical disturbance voltage at the input (V_i = 110 V, $I_{i\ nom}$, resitive load, quasi peak and average).

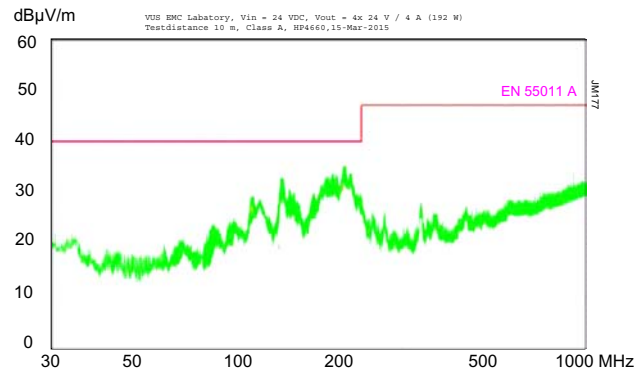

Fig. 20a
HP4660: Typ. radiated disturbances in 10 m distance (V_i = 24 V, $I_{i\ nom}$, resitive load, quasi peak).

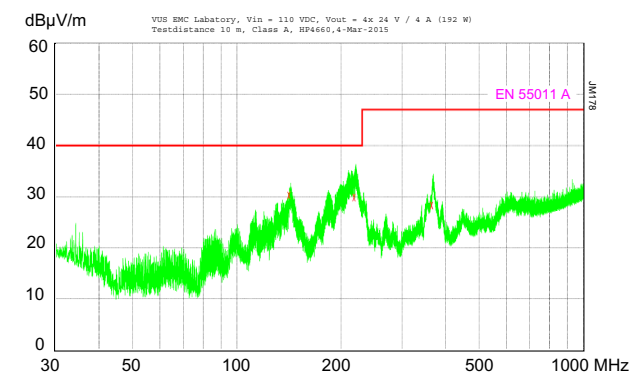

Fig. 20b
HP4660: Typ. radiated disturbances in 10 m distance (V_i = 110 V, $I_{i\ nom}$, resitive load, quasi peak).

北京泰达华芯科技发展有限责任公司 电话：13522494281 邮箱：sales001@power-teda.com
网站：www.powerteda.com

Immunity to Environmental Conditions

Table 9: :Mechanical and climatic stress. Air pressure 800 – 1200 hPa

Test method		Standard	Test conditions		Status
Cab	Damp heat steady state	IEC/EN 60068-2-78 MIL-STD-810D section 507.2	Temperature: Relative humidity: Duration:	40 ±2 °C 93 +2/-3 % 56 days	Converter not operating
Db	Damp heat test, cyclic	EN 50155:2007, clause 12.2.5 IEC/EN 60068-2-30	Temperature: Cycles (respiration effect): Duration:	55 °C and 25 °C 2 2× 24 h	Converter not operating
Bd	Dry heat test steady state	EN 50155:2007, clause 12.2.4 IEC/EN 60068-2-2	Temperature: Duration:	70 °C 6 h	Converter operating
Ad	Cooling test steady state	EN 50155:2007, clause 12.2.3 IEC/EN 60068-2-1	Temperature, duration Performance test	–40 °C, 2 h +25 °C	Conv. not operating
--	Low temperature storage test	EN 50155:2007, clause 12.2.14 IEC/EN 60068-2-1	Temperature, duration then start-up	–40 °C, 16 h	Conv. not operating
Na	Thermal shock	IEC/EN 60068-2-14	Temperature, duration Temperature, duration	–58 °C, 1 h 108 °C, 1 h	Conv. not operating
Ka	Salt mist test sodium chloride (NaCl) solution	EN 50155:2007, clause 12.2.10 IEC/EN 60068-2-11 class ST2	Temperature: Duration:	35 ±2 °C 16 h	Converter not operating
Fc	Vibration (sinusoidal)	IEC/EN 60068-2-6 MIL-STD-810D section 514.3	Acceleration amplitude: Frequency (1 Oct/min): Test duration:	0.35 mm (10 – 60 Hz) 5 g_n = 49 m/s^2 (60 - 2000 Hz) 10 – 2000 Hz 7.5 h (2.5 h in each axis)	Converter operating
Fh	Random vibration broad band (digital control) and guidance	IEC/EN 60068-2-64	Acceleration spectral density: Frequency band: Acceleration magnitude: Test duration:	0.05 g_n^2/Hz 8 – 500 Hz 4.9 $g_{n\ rms}$ 1.5 h (0.5 h in each axis)	Converter operating
Eb	Bump (half-sinusoidal)	IEC/EN 60068-2-29 MIL-STD-810D section 516.3	Acceleration amplitude: Bump duration: Number of bumps:	25 g_n = 245 m/s^2 6 ms 6000 (1000 in each direction)	Converter operating
Ea	Shock (half-sinusoidal)	IEC/EN 60068-2-27 MIL-STD-810D section 516.3	Acceleration amplitude: Bump duration: Number of bumps:	50 g_n = 490 m/s^2 11 ms 18 (3 in each direction)	Converter operating
--	Shock	EN 50155:2007 clause 12.2.11 EN 61373 sect. 10, class B, body mounted[1]	Acceleration amplitude: Bump duration: Number of bumps:	5.1 g_n 30 ms 18 (3 in each direction)	Converter operating
--	Simulated long life testing at increased random vibration levels	EN 50155:2007 clause 12.2.11 EN 61373 sect. 8 and 9, class B, body mounted[1]	Acceleration spectral density: Frequency band: Acceleration magnitude: Test duration:	0.02 g_n^2/Hz 5 – 150 Hz 0.8 $g_{n\,rms}$ 15 h (5 h in each axis)	Converter operating

[1] Body mounted = chassis of a railway coach

北京泰达华芯科技发展有限责任公司　电话：13522494281 邮箱：sales001@power-teda.com
网站：www.powerteda.com

Temperatures

Table 10: Temperature specifications, valid for an air pressure of 800 – 1200 hPa (800 – 1200 mbar)

Temperature			-9 (standard)			Unit
Characteristics		Conditions	min	typ	max	
T_A	Ambient temperature	Converter operating [1]	–40		71	°C
T_C	Case temperature [2]		–40		100 [1]	
T_S	Storage temperature	Non operational	–55		85	

[1] Operation with $P_{o\,50}$ requires reduction to $T_A \leq 50$ °C; see *Thermal Considerations*.
[2] Over temperature shutdown at $T_C > 100$ °C (NTC)

Reliability

Table 11: MTBF and device hours

Ratings at specified case temperature between failures [1]	Model	MTBF	Environmental conditions	Demonstrated hours [‡]
Accord. to IEC 62380	HP3060	846 000 h	non interface	

[1] Profile: Permanent Phase, 365 cycles per year. delta T / Cycle – 36 °C, 14 °C Tae (average outside ambient temperature), 50 °C Tac (average temperature inside system), Tau – 0.83 (annual ratio of time in permanent working mode at Tac temperature)
[2] Statistical values, based upon an average of 4300 working hours per year and in general field use over 5 years; upgrades and customer-induced errors are excluded.

北京泰达华芯科技发展有限责任公司　电话：13522494281 邮箱：sales001@power-teda.com
网站：www.powerteda.com

Mechanical Data

The converters are designed to be inserted in a 19" rack according to IEC 60297-3. Dimensions in mm.

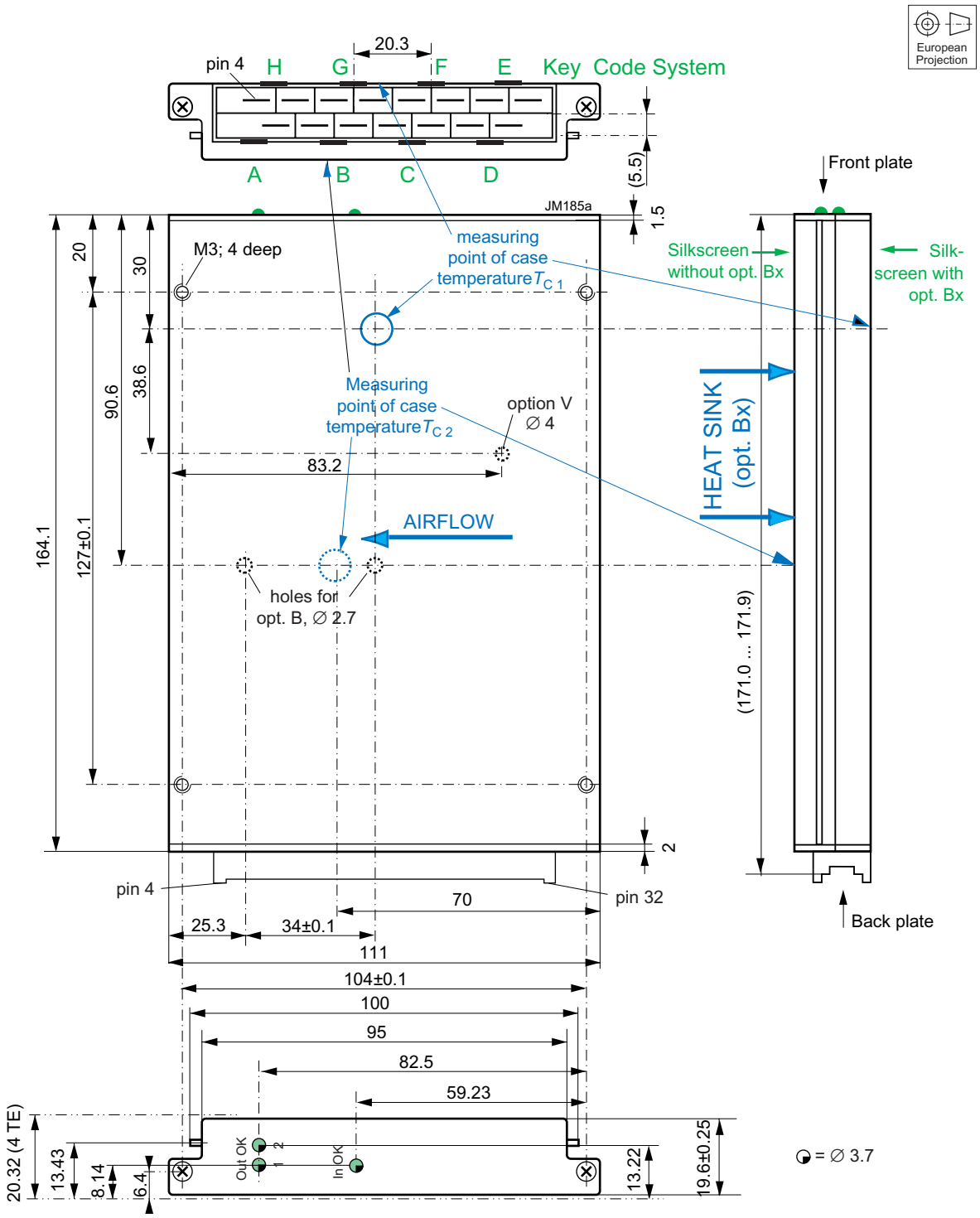

Fig. 21:
Case Q05, weight approx. 500 g
Aluminum, fully enclosed, black,
EP powder coated

Note: Long case, elongated by 60 mm for a 220 mm rack depth, is available on request: Add 5000 to the part number.

北京泰达华芯科技发展有限责任公司 电话：13522494281 邮箱：sales001@power-teda.com
网站：www.powerteda.com

Safety and Installation Instructions

Connector Pin Allocation

The connector pin allocation table defines the electrical potentials and the physical pin positions on the H15 connector. Pin 26, protective earth, is a leading pin to ensure that it makes contact with the female connector first.

Note: High currents require a large cross-sectional area of the connections to the female contacts. We recommend solder or screw terminal contacts. Each faston connection exhibits a resistance of max. 8 mΩ (typ. 4 mΩ).

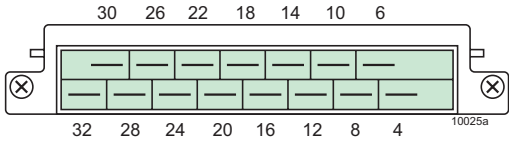

Fig. 22
View of male standard H15 connector.
Code Key positions are shown in fig. 21.

Table 12: Pin allocation

Pin	HP 1000		HP2000		HP3000		HP4000	
4	Vo+	Output 1 pos.	Vo1+	Output 1 pos.	Vo1+	Output 1 pos.	Vo1+	Output 1 pos.
6	Vo+	Output 1 pos.	Vo2+	Output 2 pos.	Vo2+	Output 2 pos.	Vo2+	Output 2 pos.
8	Vo–	Output 1 neg.	Vo1–	Output 1 neg.	Vo1–	Output 1 neg.	Vo1–	Output 1 neg.
10	Vo–	Output 1 neg.	Vo2–	Output 2 neg.	Vo2–	Output 2 neg.	Vo2–	Output 2 neg.
12	S+	Sense + [2]	S1+	Sense 1 + [2]	S1+	Sense 1 + [2]	Vo4+	Output 4 pos.
14	S–	Sense – [2]	S1–	Sense 1 – [2]	S1–	Sense 1 – [2]	Vo4–	Output 4 neg.
16	R	Adjust of V_o	R	Adjust of V_{o1}	R	Adjust of V_{o1}	R	Adjust of $V_{o1/4}$
			T[1]	Current share[1]	T[1]	Current share[1]		
18	T	Current share	S2+	Sense 2 + [2]	Vo3+	Output 3 pos.	Vo3+	Output 3 pos.
20	n.c.	Not connected	S2–	Sense 2 – [2]	Vo3–	Output 3 neg.	Vo3–	Output 3 neg.
22	OK+	Out OK+	OK+	Out OK+	OK+	Out OK+	OK+	Out OK+
24	OK–	Out OK–	OK–	Out OK–	OK–	Out OK–	OK–	Out OK–
26	⏚	Prot. earth PE	⏚	Prot. earth PE	⏚	Prot. earth PE	⏚	Prot. earth PE
28	PUL (i) [3]	PUL or inhibit	PUL (i) [3]	PUL or inhibit	PUL (i) [3]	PUL or inhibit	PUL (i) [3]	PUL or inhibit
30	Vi+	Input pos.	Vi+	Input pos.	Vi+	Input pos.	Vi+	Input pos.
32	Vi–	Input neg.	Vi–	Input neg.	Vi–	Input neg.	Vi–	Input neg.

[1] Option T is available for single-output powertrains only. The T-function influences I_{o1} only. It is standard for single-output models.
[2] Sense lines are only available for single-output powertrains. With double-output power trains, these pins are not connected.
[3] Pin 28 is the primary inhibit for models with options U or V. For other models it is the PUL function.

北京泰达华芯科技发展有限责任公司 电话：13522494281 邮箱：sales001@power-teda.com
网站：www.powerteda.com

Installation Instructions

These converters are components, intended exclusively for inclusion within other equipment by an industrial assembly process or by a professionally competent person. Installation must strictly follow the national safety regulations in respect of the enclosure, mounting, creepage distances, clearances, markings and segregation requirements of the end-use application.

Connection to the system shall be made via the female connector H15 (see *Accessories*). Other installation methods may not meet the safety requirements. Check for hazardous voltages before altering any connections. Pin 26 (PE) is a leading pin and is reliably connected to the case. For safety reasons it is essential to connect this pin to the protective earth.

No fuse is incorporated in the converter. An external circuit breaker or a fuse in the wiring to one or both input pins (no. 30 and/or no. 32) are necessary to ensure compliance with local requirements.

Do not open the converters, or the warranty will be invalidated. Make sure that there is sufficient airflow available for convection cooling. This should be verified by measuring the case temperature at the specified measuring point, when the converter is operated in the end-use application. $T_{C\,max}$ should not be exceeded. Ensure that a failure of the converter does not result in a hazardous condition.

Standards and Approvals

The P Series converters are approved according to the safety standards IEC/EN 60950-1 and UL/CSA 60950-1 2nd Ed.

They have been evaluated for:

- Class I equipment
- Building in
- Double or reinforced insulation based on 250 VAC or 240 VDC between input and output and between input and auxiliary circuits
- Overvoltage category II
- Pollution degree 2 environment
- The converters fulfill the requirements of a fire enclosure.

The converters are subject to manufacturing surveillance in accordance with the above mentioned UL standards and with ISO 9001:2008.

Cleaning Liquids and Protection Degree

The converters are not hermetically sealed. In order to avoid possible damage, any penetration of liquids shall be avoided.

The converters correspond to protection degree IP 40, provided that the female connector is fitted to the converter.

Railway Applications

The HP Series converters have been designed observing the railway standards EN 50155:2007 and EN 50121-3-2:2015. All boards are coated with a protective lacquer.

The converters fulfill the requirements of the fire safety standard EN 45545, hazard levels HL1 to HL3.

Isolation

The electric strength test is performed in the factory as routine test in accordance with EN 50514 and IEC/EN 60950 and should not be repeated in the field. The Company will not honor warranty claims resulting from incorrectly executed electric strength tests.

Table 13: Isolation

Characteristic		Input to outputs[1]	Input to case+outputs	Outputs to case	Output to output	Out OK signals to input	Out OK signals to case	Out OK signals to outputs	Unit
Electric strength test	Factory test >1 s	4.2	2.86	1.0	1.0 / 0.75 [3]	2.86	1.0	0.75	kVDC
	AC test voltage equivalent to actual factory test	3.0	2.0	0.7	0.7 / 0.5 [3]	2.0	0.7	0.5	kVAC
Insulation resistance		>300 [2]	>300 [2]	>100	>100	>300 [2]	>100	>100	MΩ
Creepage distances		5.0	3.5	1.5	1.0 / 0.5 [3]	3.5	1.5	1.0	mm

[1] Pretest of subassemblies in accordance with IEC/EN 60950
[2] Tested at 500 VDC
[3] Second value between outputs of the same powertrain

北京泰达华芯科技发展有限责任公司 电话：13522494281 邮箱：sales001@power-teda.com
网站：www.powerteda.com

Description of Options

Option T: Active Current Sharing

For single-output powertrains only. The current-share function should be used, when several powertrains are operated in parallel. Examples could be high reliability n+1 redundant systems or systems providing higher output power.

Using this feature reduces the stress of individual converters and improves the reliability of the system. Interconnection of the current-sharing pins T causes the converters to share their output currents evenly.

In redundant systems, the outputs of the converters have to be decoupled by ORing diodes. Consequently, a failure of one converter will not lead to a system failure.

To ensure correct operation of the current-share function, the installer must ensure that the S– pins of all parallel converters are at the same electrical potential and that there are no voltage drops across the connecting lines between these pins.

Double-output converters with outputs connected in series can also be paralleled with current sharing, if pins Vo1– of all converters are connected together; see fig. 9.

If the output voltages of parallel connected single-output converters are programmed to a voltage other than $V_{o\,nom}$ by means of the R-pin, the outputs should be adjusted individually within a tolerance of ±1%.

Note: The T-function influences V_{o1} only.

Option U: Preadjusted Undervoltage Lockout UVL

For compatibility with former P Series converters, the start-up and the shutdown voltage are preadjusted depending on the nominal battery voltage. In addition, pin 28 (i) is used as inhibit; refer to the clause *Primary Inhibit* below.

Table 14 defines the start-up and shutdown voltages. For the recommended fuses, refer to table 3.

Option V: Rotary Switch to Adjust UVL

Converters with option V allow for adjustment of the shutdown voltage by means of a 4 position rotary switch, accessible through a hole in the case. In addition, pin 28 (i) is used as inhibit; refer to the clause *Primary Inhibit* below.

Table 14 defines the start-up and shutdown voltages. For the recommended fuses, refer to table 3. The rotary switch is set in the factory to position D.

Table 14: UVL specification (typ.) for option U and V

Battery	Option U	Position (Opt. V)	$V_{i\,min}$ (on / off)	
24 V	U14	A	14.9 V	12.5 V [1]
36 V	U21	B	21.3 V	17 V
72 V [3]	U42	C	43 V	34 V
110 V	U70	D [2]	71 V	56 V

[1] for ≤ 2 s [2] factory setting [3] also for 96 V battery

Primary Inhibit for Option U and V

This inhibit (pin 28) input enables (logic low) or disables (logic high or open-circuit) the output. In systems consisting of several converters, this feature may be used to control the activation sequence by logic signals or to enable the power source to start up, before full load is applied.

The output response is shown in fig. 14.

Table 15: Inhibit characteristics (models with option U or V)

Characteristic			Conditions	min	typ	max	Unit
V_{inh}	Inhibit Voltage	V_o = on	$V_{i\,min}$ – $V_{i\,max}$ $T_{C\,min}$ – $T_{C\,max}$	– 1.0		0.8	V
		V_o = off		2.4		50	
I_{inh}	Inhibit current		V_{inh} = 0 V V_{inh} = 5 V V_{inh} = 50 V		– 0.01 – 0.06 – 0.2		mA

Note: If this function is not used, pin 28 must be connected with pin 32, otherwise the internal logic will disable the output.

Option B0, B1, B3: Heat Sink

The converter is fitted with an additional heat sink.

Table 16: Thermal resistance of the case (approx. values)

Case	Thermal resistance	Thickness of case
Standard, 160 mm long	1.6 K/W	< 20 mm
Case, 220 mm long [1]	1.4 K/W	< 20 mm
Option B0	1.5 K/W	< 30 mm
Option B1	1.4 K/W	< 40 mm
Option B3	1.2 K/W	< 50 mm

[1] Add 5000 to the part number.

北京泰达华芯科技发展有限责任公司 电话：13522494281 邮箱：sales001@power-teda.com
网站：www.powerteda.com

Accessories

A variety of electrical and mechanical accessories is available:

- Mating connectors including faston, screw, solder, or press-fit terminals; see Mating Connectors data sheet BCD.20022.
- Front panels, system Schroff, for 19" racks in 3 U configuration 4 TE (G04-Q01), 5 TE (G05-Q01), or 6 TE (G06-Q01). Similar panels system Intermas available.
- Front panels, system Schroff, for 19" racks in 6 U configuration 5 TE (G05-6HE-Q01)
- Mechanical mounting supports for chassis, DIN-rail, and PCB mounting plate Q (HZZ01215-G) with retention clips Q (HZZ01229-G)
- Connector retention brackets CRB-Q (HZZ01217-G)
- Different cable connector housings (cable hoods)

For additional accessory product information, see the accessory data sheets listed with each product series or individual model at our website.

H15 female connector, code key system, faston, screw or other terminals

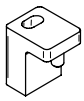

Connector retention bracket CRB-Q HZZ01217-G

Universal mounting bracket for DIN-rail and chassis mounting (HZZ00610-G).

Mounting plate Q for wall mounting (HZZ01215-G) with connector retention clips Q (HZZ01229-G)

Front panel kit G05-6HE-Q01 (HZZ00838) accommodating two HP units for a 19" DIN-rack with 6 U, 5 TE.

北京泰达华芯科技发展有限责任公司　电话：13522494281　邮箱：sales001@power-teda.com
网站：www.powerteda.com

NUCLEAR AND MEDICAL APPLICATIONS - These products are not designed or intended for use as critical components in life support systems, equipment used in hazardous environments, or nuclear control systems.

TECHNICAL REVISIONS - The appearance of products, including safety agency certifications pictured on labels, may change depending on the date manufactured. Specifications are subject to change without notice.